Battery Water Level Indicator

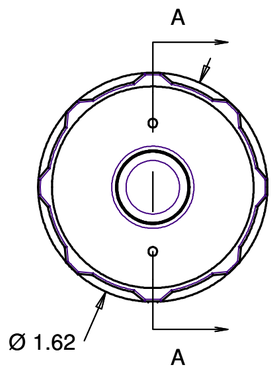

PART NO.	A	B
4000425	1.39"	1.86"
4000550	2.50"	3.06"
4000600	3.10"	3.52"

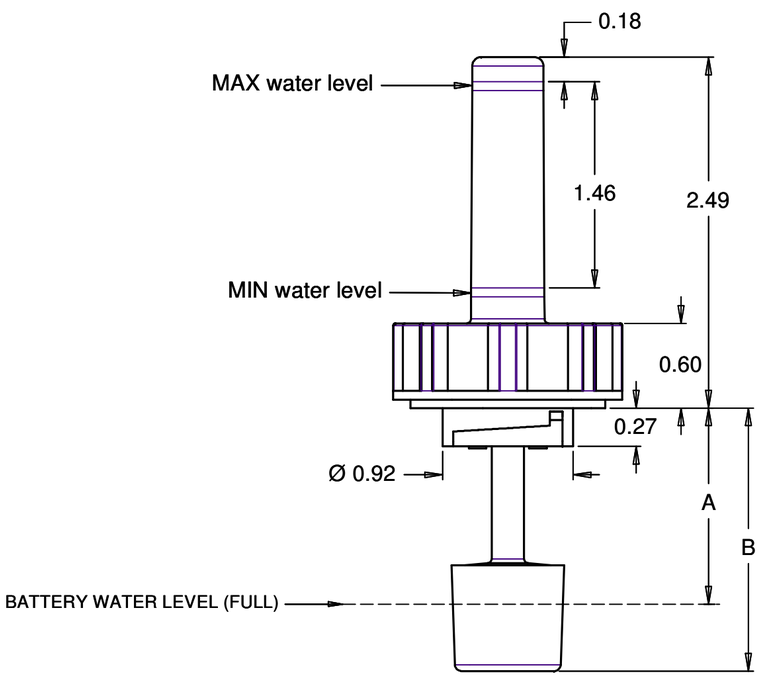

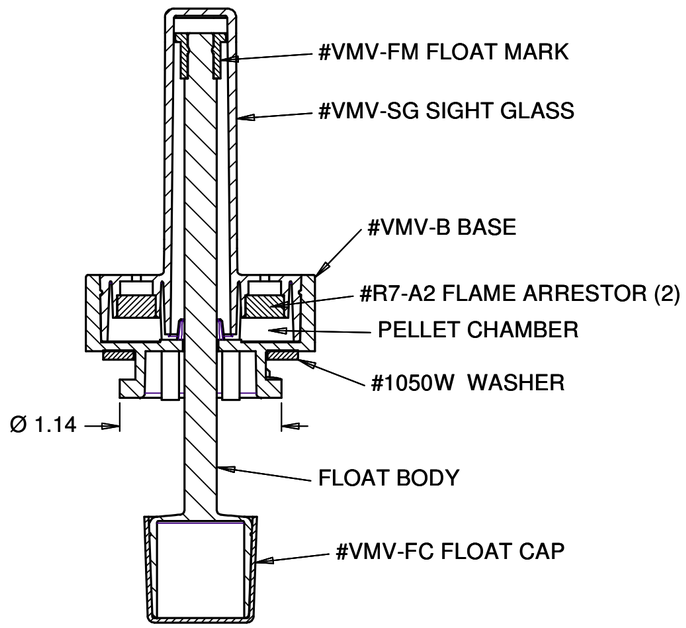

Section A-A

PATENT PENDING

THIS DOCUMENT CONTAINS CONFIDENTIAL AND PROPRIETARY INFORMATION, AND MAY NOT BE USED, COPIED OR DISCLOSED IN WHOLE OR IN PART FOR ANY PURPOSE INCLUDING DESIGN OR MANUFACTURE WITHOUT THE PRIOR WRITTEN CONSENT OF DOYLE MANUFACTURING INC.

REVISION	DESCRIPTION	BY	DATE

DRAWN: D. WATERS	DATE: 9/16/14	DOYLE MANUFACTURING INC. 1440 HOLLOWAY ROAD HOLLAND, OHIO 43528 — QUALITY CERTIFIED ISO/TS16949:2002	
TOLERANCE UNLESS SPECIFIED .X = +/-.060 .XX = +/-.030	.XXX = +/-.010 .XXXX = +/-.005		
CUSTOMER: SHAMROCK	PART NO.: SEE CHART	PART NAME: VISUAL MONITORING VENT	
MATERIAL	SHRINKAGE	JOB #	SHT 1
COLOR	UNITS: INCHES		OF 1