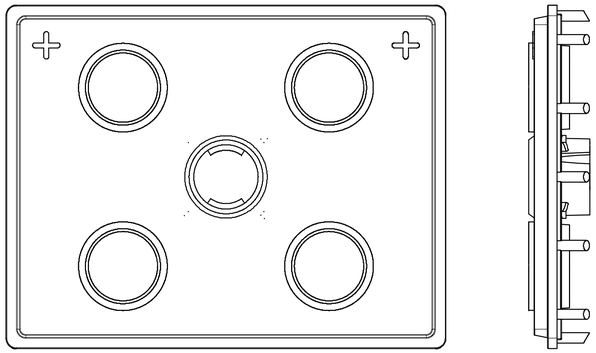

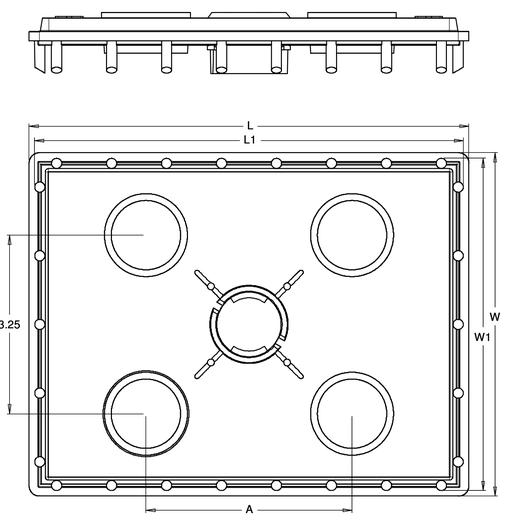

Plate Size	Dim. L	Dim. L1	Dim. W	Dim. W1	Dim. A
17	6.50	6.30	6.25	6.05	3.00
19	7.25	7.05	6.25	6.05	3.00
21	8.00	7.80	6.25	6.05	3.75
23	8.75	8.55	6.25	6.05	3.75
25	9.50	9.30	6.25	6.05	3.75
27	10.25	10.05	6.25	6.05	3.75

NARROW SERIES 4-POST
BATTERY CELL COVERS

Part Number	Description
BCC17-BAY-FF	BatCelCovr17plt Float (all)
BCC17-BAY-L	BatCellCovr17plt Lead (all)
BCC17-BAY-LF	BatCellCovr17plt Lead Float
BCC17-BAY-WS-L	BatCellCovr17pltWtrSavrLead
BCC17-BAY-WS-LF	BatCelCovWtrSavr17plLeadFloat
BCC19-BAY-FF	BatCellCovr19plt Float (all)
BCC19-BAY-L	BatCellCovr19plt Lead (all)
BCC19-BAY-LF	BatCellCovr19plt LeadFloat
BCC19-BAY-WS-L	BatCellCovr19pltWtrSavrLead
BCC19-BAY-WS-LF	BatCellCovWtrSavr19plLeadFloat
BCC21-BAY-FF	BatCellCovr21plt Float (all)
BCC21-BAY-L	BatCellCovr21plt Lead (all)
BCC21-BAY-LF	BatCellCovr21plt Lead Float
BCC21-BAY-WS-L	BatCellCovr21pltWtrSavr Lead
BCC21-BAY-WS-LF	BatCellCovWtrSavr21plLeadFloat
BCC23-BAY-FF	BatCelCovr23plt Float (all)
BCC23-BAY-L	BatCellCovr23plt Lead (all)
BCC23-BAY-LF	BatCellCovr23plt Lead Float
BCC23-BAY-WS-L	BatCellCovr23pltWtrSavrLead
BCC23-BAY-WS-LF	BatCellCovWtrSavr23plLeadFloat
BCC25-BAY-FF	BatCelCovr25plt Float (all)
BCC25-BAY-L	BatCellCovr25plt Lead (all)
BCC25-BAY-LF	BatCellCovr25plt Lead Float
BCC25-BAY-WS-L	BatCellCovr25pltWtrSavrLead
BCC25-BAY-WS-LF	BatCelCovWtrSavr25plLeadFloat
BCC27-BAY-FF	BatCelCovr27plt Float (all)
BCC27-BAY-L	BatCellCovr27plt Lead (all)
BCC27-BAY-LF	BatCellCovr27plt Lead Float
BCC27-BAY-WS-L	BatCellCovr27pltWtrSavrLead
BCC27-BAY-WS-LF	BatCellCovWtrSavr27plLeadFloat

* MORE STANDARD OPTIONS ARE AVAILABLE.
CALL 1-419-865-8441 TO INQUIRE.

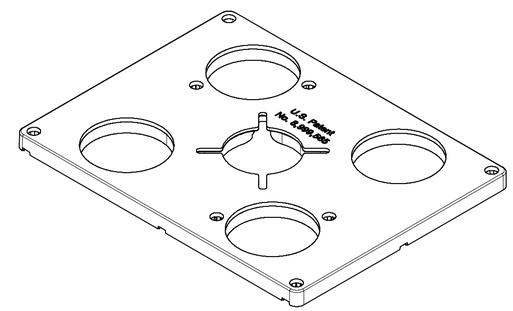

OPTIONAL WATER-SAVER INSERT

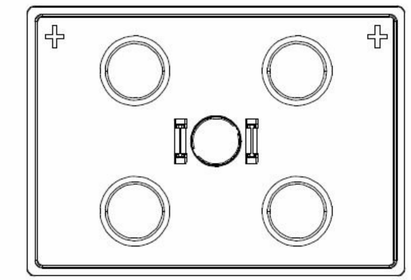

OPTIONAL MOLDED-IN FLIP-CAP HINGE

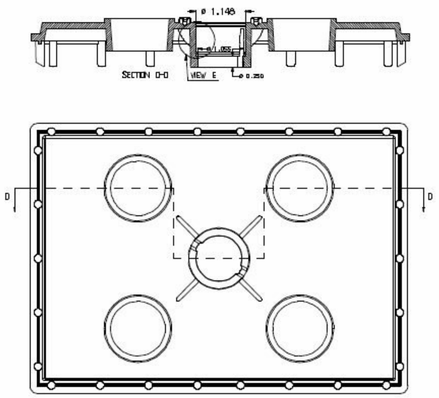

NOTE- THE FOLLOWING OPTIONS ARE
AVAILABLE FOR ALL TERMINAL POSITIONS:
1) MOLDED-IN LEAD BUSHINGS (SHOWN HERE)
2) FLOATING LEAD BUSHINGS (SHOWN HERE)
3) FLOATING RUBBER BUSHINGS (SHOWN ABOVE)

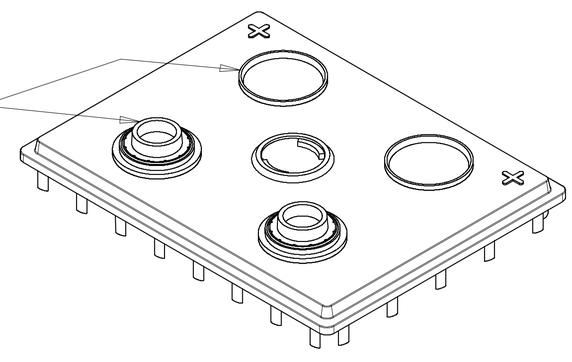

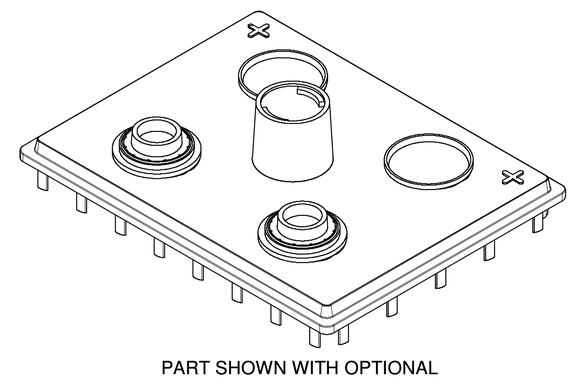

PART SHOWN WITH OPTIONAL
1.250" TALL VENT WELL

THIS DOCUMENT CONTAINS CONFIDENTIAL AND PROPRIETARY INFORMATION, AND MAY NOT BE USED, COPIED OR DISCLOSED IN WHOLE OR IN PART FOR ANY PURPOSE INCLUDING DESIGN OR MANUFACTURE WITHOUT THE PRIOR WRITTEN CONSENT OF DOYLE MANUFACTURING INC.

REVISION	DESCRIPTION	BY	DATE

DRAWN: D. WATERS	DATE: 2/28/05	DOYLE MANUFACTURING INC. MAKING PLASTIC MOLDS SINCE 1975.
TOLERANCE UNLESS SPECIFIED: +.10/-.05		1440 HOLLOWAY ROAD HOLLAND, OHIO 43528 — QUALITY CERTIFIED ISO/TS16949:2002
CUSTOMER: SHAMROCK	PART NO.: SEE CHART	PART NAME: NARROW SERIES 4-POST BATTERY CELL COVER
MATERIAL: PP	SHRINKAGE	JOB #: 01-96 — SHT 1 OF 1
COLOR: BLACK	UNITS: INCHES	