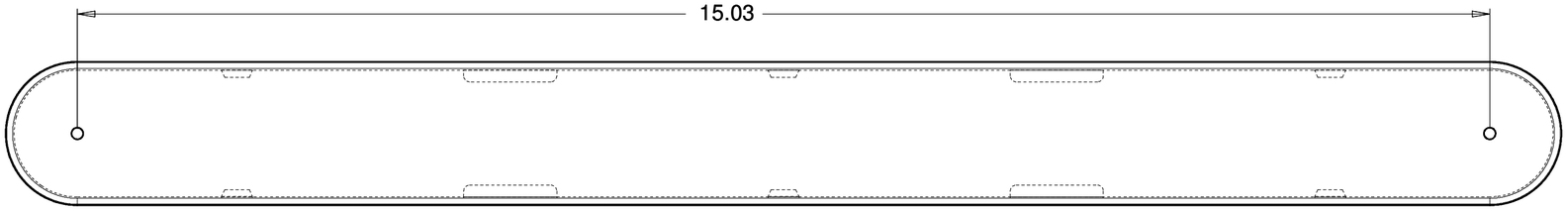

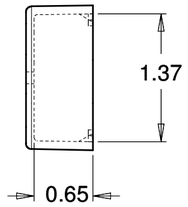

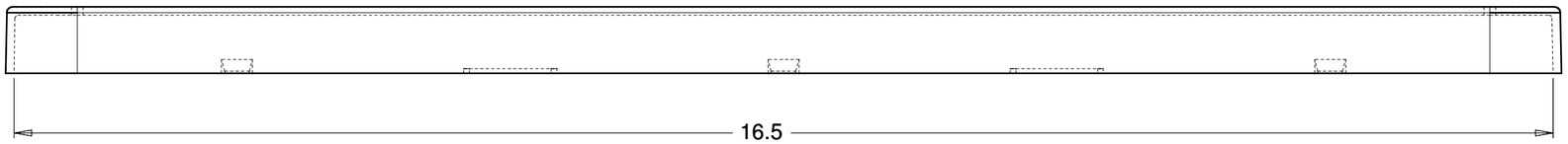

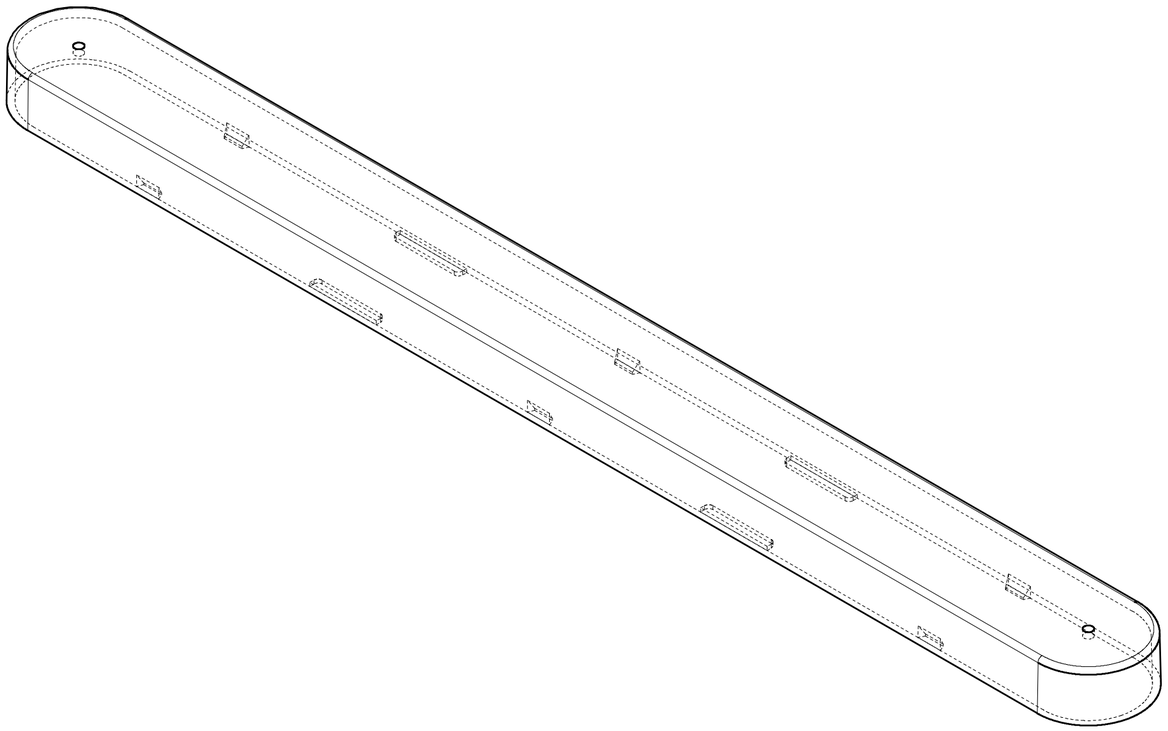

THIS DOCUMENT CONTAINS CONFIDENTIAL AND PROPRIETARY INFORMATION, AND MAY NOT BE USED, COPIED OR DISCLOSED IN WHOLE OR IN PART FOR ANY PURPOSE INCLUDING DESIGN OR MANUFACTURE WITHOUT THE PRIOR WRITTEN CONSENT OF DOYLE MANUFACTURING INC.

REVISION	DESCRIPTION	BY	DATE

DRAWN D. WATERS	DATE	DOYLE MANUFACTURING INC. MAKING PLASTIC MOLDS SINCE 1975.	
TOLERANCE UNLESS SPECIFIED .X = +/-.060 .XX = +/-.030 .XXX = +/-.010 .XXXX = +/-.005		1440 HOLLOWAY ROAD HOLLAND, OHIO 43528	QUALITY CERTIFIED ISO/TS16949:2002
CUSTOMER SHAMROCK	PART NO. SH15	PART NAME BATTERY TERMINAL COVER #15	
MATERIAL PP	SHRINKAGE	JOB #	SHT 1
COLOR	UNITS INCHES		OF 1